ALCOR SMOKING SHELTER

Free Delivery

Manufacturers Warranty

Quantity discounts available.
Please contact us for a specific quote.

Best prices guaranteed!

Contact Us

Tamstar

Capacity: Up to 10 people
Lead time: 2-3 weeks

- 0161 447 8929
- www.tamstar.co.uk
- Barcroft Street, Bury BL9 5BT
- enquiries@tamstar.co.uk

SPECIFICATIONS

- Comes galvanised as standard with an optional polyester powder coating to give extra durability and a nice colour finish
- 4mm clear Petg glazing providing impact resistance and UV protection
- Standard colours available: Blue, Green & Black
- Base plate feet are fully adjustable for easy on site levelling and can be fixed to solid concrete

FEATURES

- Comes with ground fixing kit and assembly instructions
- Fully complaint with UK legislation (no more than 50% enclosed area)
- Product Ref: S2SC4
- Dimensions: 4100mm x 1700mm x 2100mm (LxWxH)

OPTIONAL EXTRAS

BLACKTHORN BENCH

ELECTRA ASHTRAY

EPSILON

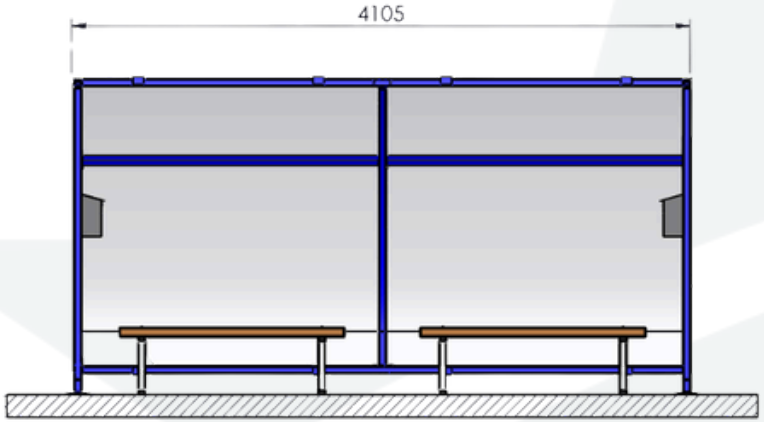

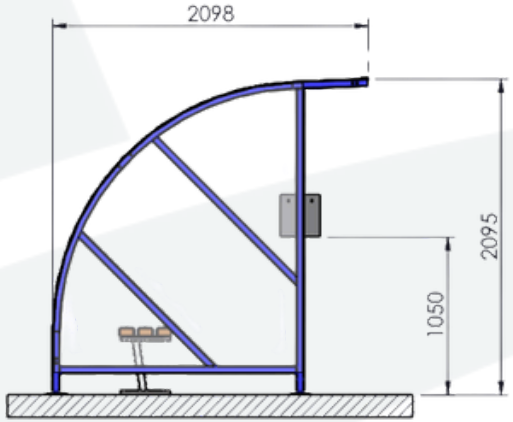

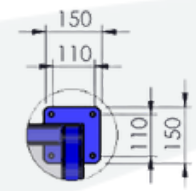

DETAIL A
SCALE 1 : 18

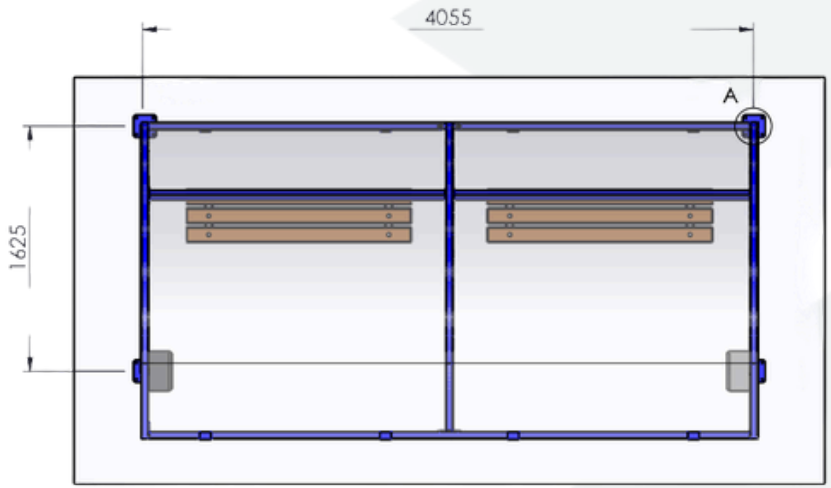

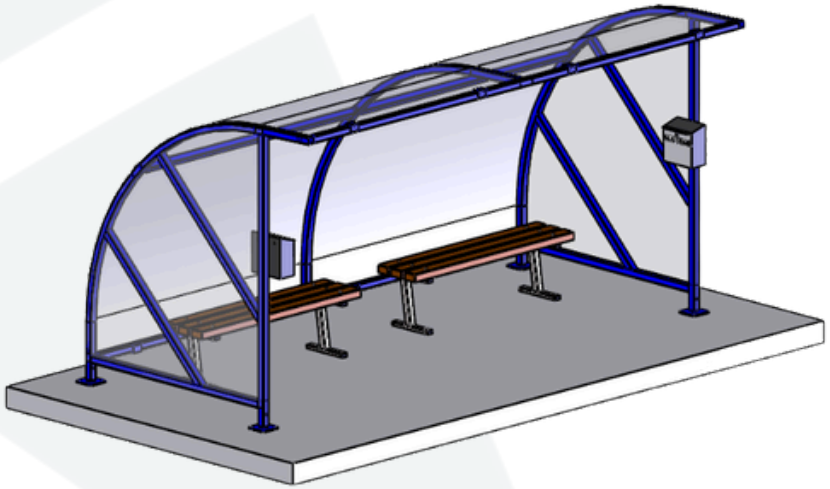

Tamstar

PRODUCT DIMENSIONS

- 0161 447 8929
- www.tamstar.co.uk
- Barcroft Street, Bury, BL9 5BT
- enquiries@tamstar.co.uk